BULLETIN 563A

Model 367D Bidirectional Wet/Wet

Differential Pressure Transducer

Features

- *High accuracy*
- *±5 Volt output*
- *±5 IN W.C.D. to ±100 PSID ranges*
- *1000 PSI base pressure*
- *Internal, NIST traceable calibration*

Description

The Model 367D is a wet/wet transducer capable of measuring small differential pressures at high base pressures. It features high overload capacity and the latest capacitive measurement technology. Integral signal conditioning provides ±5 volt d-c output, zero and span trim, and calibration functions.

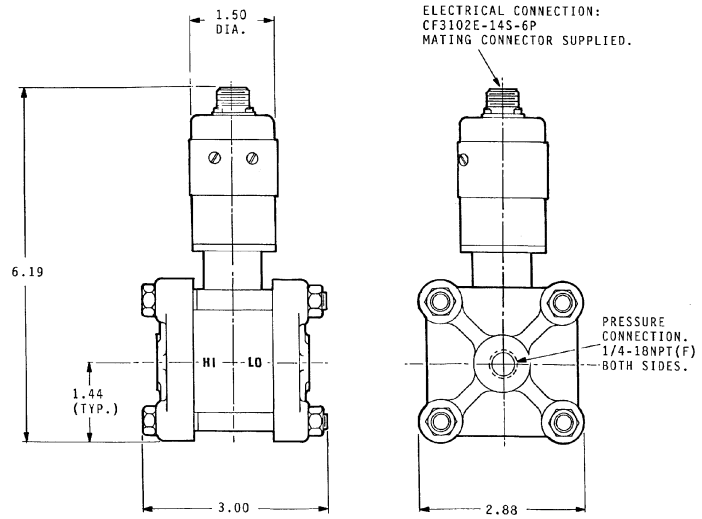

Specifications

Full Scale (F.S.) Ranges: ..... ±5, ±10, ±20, ±50, ±100, ±300, ±750 IN W.C.D. and ±15, ±50, ±100 PSID
Full Scale Output: ..... ±5 Volts
Non-linearity & Hysteresis:.....max combined error is 0.2% of F.S., best fit straight line.
Repeatability: ..... ±0.06% of F.S.
Response Time (10 to 90%): .....100 millisecond (mS) max. for 50 IN W.C.D. and higher, 500 mS max. below 50 IN W.C.D.
Dead Volume:.....0.4 cubic inches
Differential Base Pressure: .....1000 PSI
Proof Pressure: .....1000 PSI
Burst Pressure: .....1500 PSI
Reference Fluid:.....any compatible with 316 SS and Viton
Nominal Weight: .....4 lbs.

Supply Voltage: ..... 10-42 Volts d-c
Reverse Polarity Protection:..... standard
Electrical Load: ..... 1 mA maximum, or 3k ohm minimum
Span Adjustment: ..... ±10% of F.S.
Zero Adjustment: ..... ±10% of F.S.
Calibration Accuracy: ..... ±0.1% of F.S. @ 70 degrees (deg.) F.
Temperature Effects:
Compensated Range:..... +70 to +170 deg. F.
Usable Range: .....0 to +200 deg. F.
Storage Range: .....- 40 to +250 deg. F.
Zero Drift: ..... ±0.02% of F.S./deg. F.
Span Drift: ..... ±0.02% of reading/deg. F.
Electrical Connections:

Pin A: +Excitation	Pin C: +Signal	Pin E: Calibration*
Pin B: - Excitation	Pin D: - Signal	Pin F: Calibration*

* Short Pins E and F to invoke CALIBRATION

Model Numbering

367D - 20 - IN

Basic Model No. — **367D**
Range — **20**
Pressure Units — **IN**

PSI = PSID
IN = IN W.C.D.

S. HIMMELSTEIN AND COMPANY

2490 Pembroke Avenue, Hoffman Estates, IL 60169, USA • Tel:847/843-3300 • Fax847/843-8488

©1992, 1996, 2001, 2002, 2006 S. HIMMELSTEIN & CO.